ESP32

AZ-Delivery D1 Mini ESP32

pinout

datasheet

TTGO ESP32

builtin led pin 22

ESP32 devkit v1 TTGO mini32 ESP32 bangood amazon

```
Chip is ESP32D0WDQ6 (revision 1)
Features: WiFi, BT, Dual Core, 240MHz, VRef calibration in efuse
```

- PIN 22 is connected to green LED

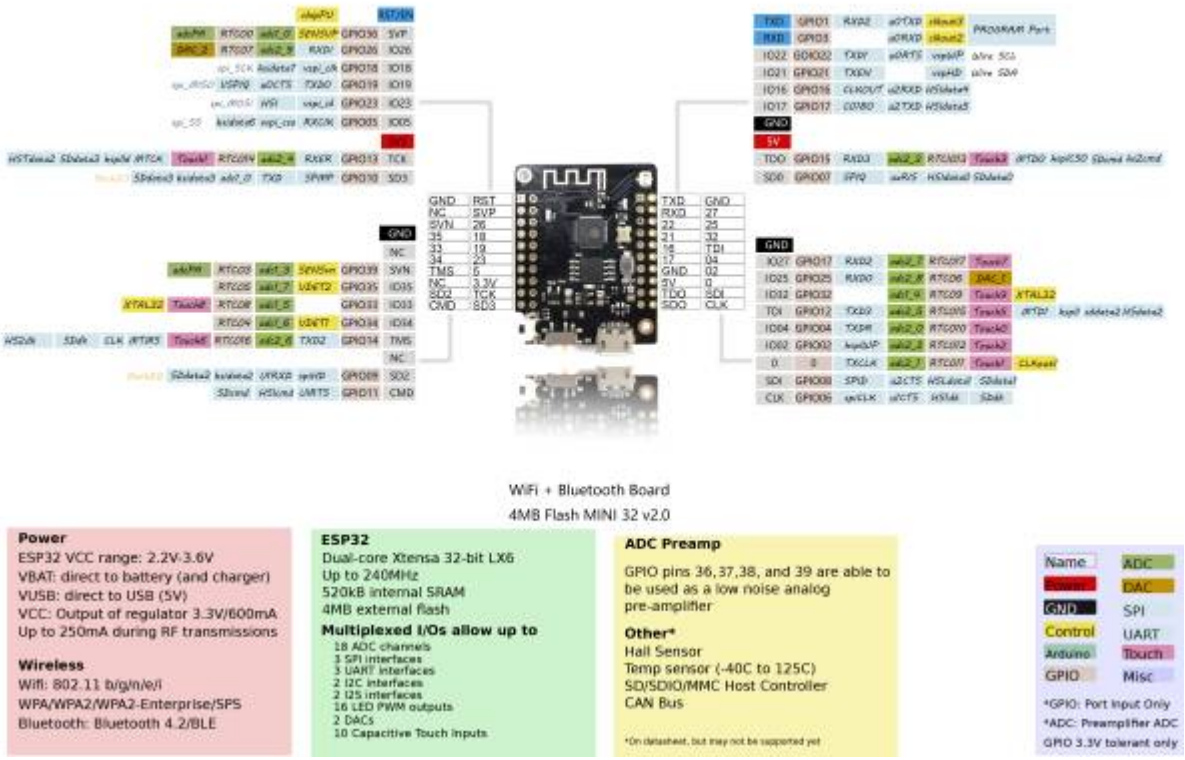

- arduino example

DOIT ESP32

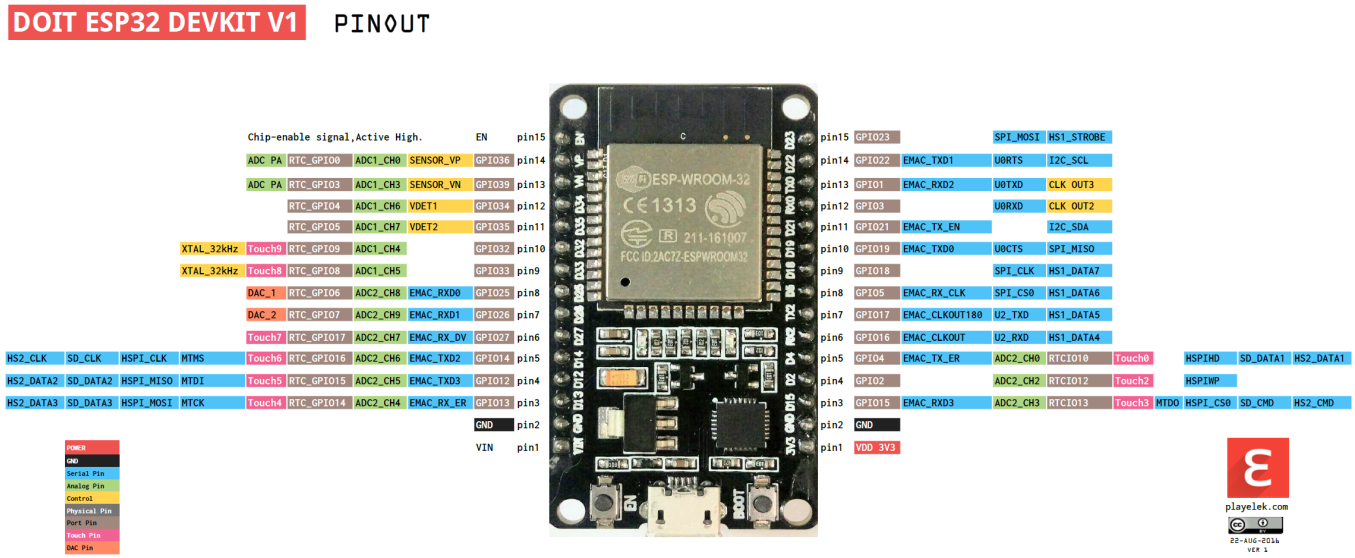

physical pinout

MakerHawk ESP32 OLED Display

resources

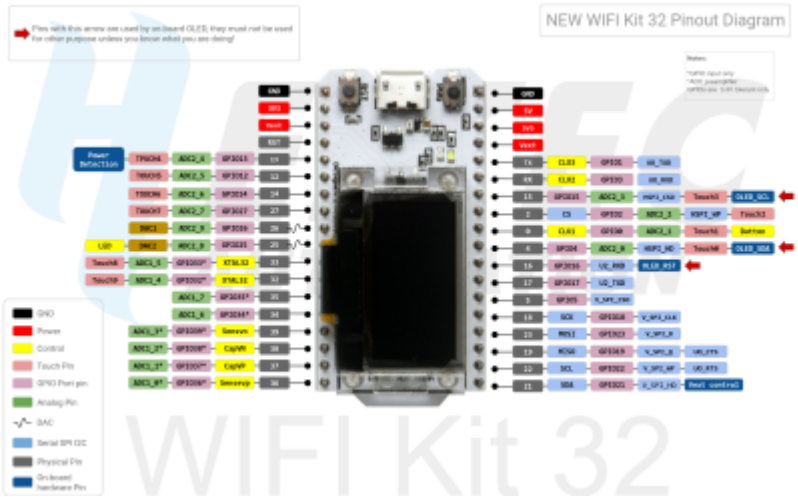

From:
https://wiki.csgalileo.org/ - **Galileo Labs**

Permanent link:
https://wiki.csgalileo.org/projects/internetofthings/esp32?rev=1617944830

Last update: **2021/04/09 07:07**