ESP32

how to use pins esp32 chip only

Lolin32 lite

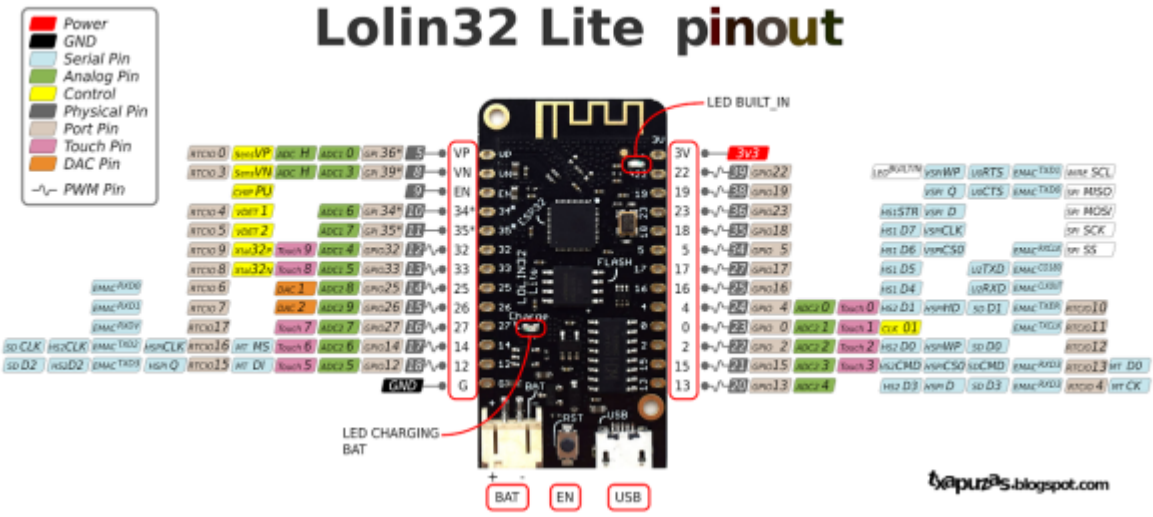

- platformio specifications
- ESP32 Module: ESP-WROOM-32 from Espressif.
- 240MHz dual core microprocessor equipped with
- 4MB SPI flash memory. Support up to 16MB of flash memory
- Connectivity
- WiFi 802.11 b / g / n.
- Security WEP, WPA / WPA2 PSK / Enterprise.
- Integrated cryptographic chip supporting AES / SHA2 / Elliptical Curve Cryptography / RSA-4096 algorithms
- Maximum power for data transfer: 19.5 dBm@11b, 16.5 dBm@11g, 15.5 dBm@11n
- Sensitivity max. reception: -97 dBm
- Bluetooth 4.0 LE
- 32 Inputs / Outputs
- 26x Digital I / O (3.3V). All outputs can be PWM
- 18x analog inputs
- 3x UART
- 3x SPI
- 2x I2S
- 2x DAC
- 2x I2C
- Sleep Mode Consumption: 5 µA
- Integrated sensors
- Hall Effect
- 10x inputs for capacitive touch interface
- LiPo battery connector JST XH2-2.54mm

LILYGO TTGO T5 V2.3_2.13

- https://fr.aliexpress.com/item/32869729970.html
- display: GxGDEM0213B74
- SKU: H239 2-colors
  - platformio project: https://github.com/Xinyuan-LilyGO/T5-Ink-Screen-Series
    - #define LILYGO*T5*V213
    - #include <GxDEPG0213BN/GxDEPG0213BN.h>

AZ-Delivery D1 Mini ESP32

pinout

datasheet

TTGO ESP32

builtin led pin 22

ESP32 devkit v1 TTGO mini32 ESP32 bangood amazon

```
Chip is ESP32D0WDQ6 (revision 1)
Features: WiFi, BT, Dual Core, 240MHz, VRef calibration in efuse
```

- PIN 22 is connected to green LED

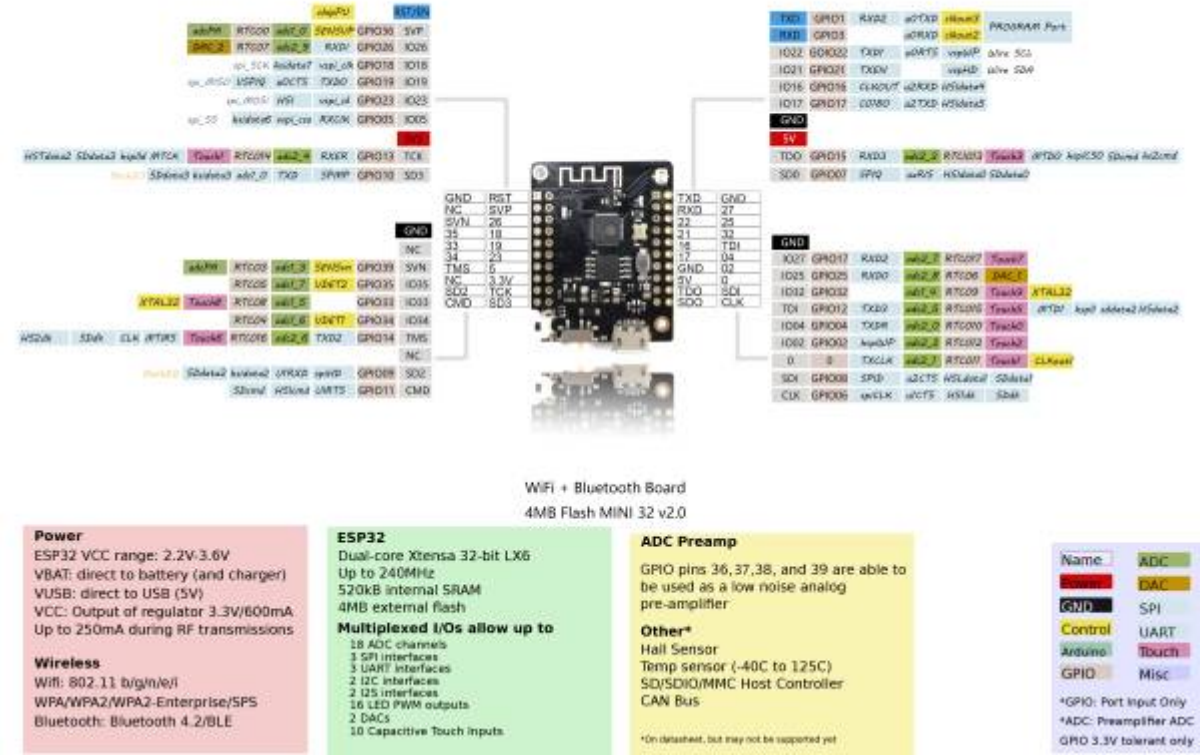

- arduino example

DOIT ESP32

DOIT ESP32 DEVKIT V1 PINOUT

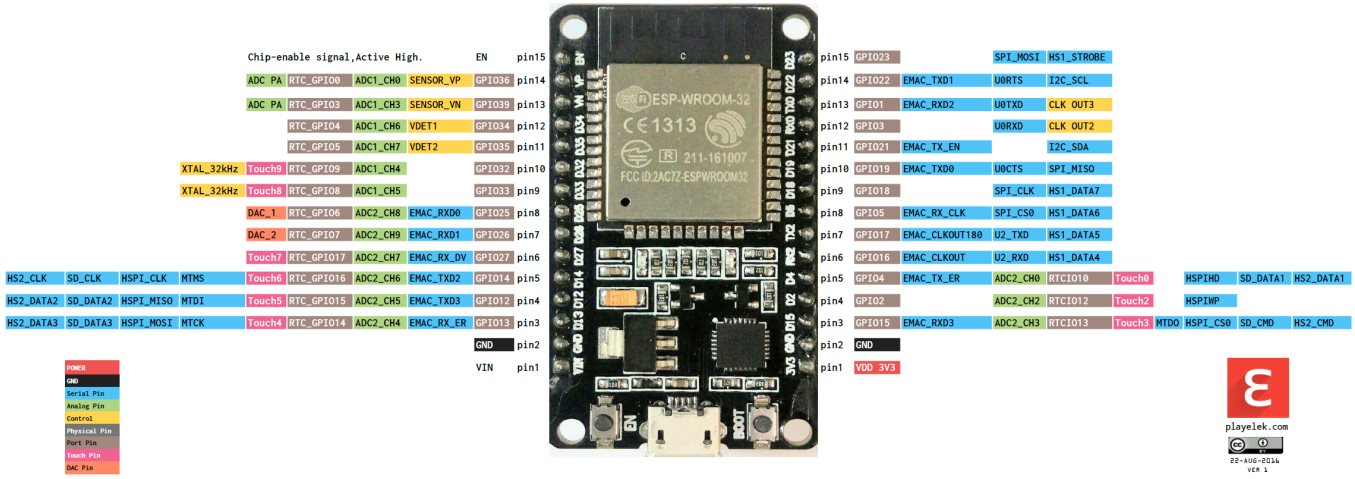

physical pinout

MakerHawk ESP32 OLED Display

- resources
- github lib

- pins arduino

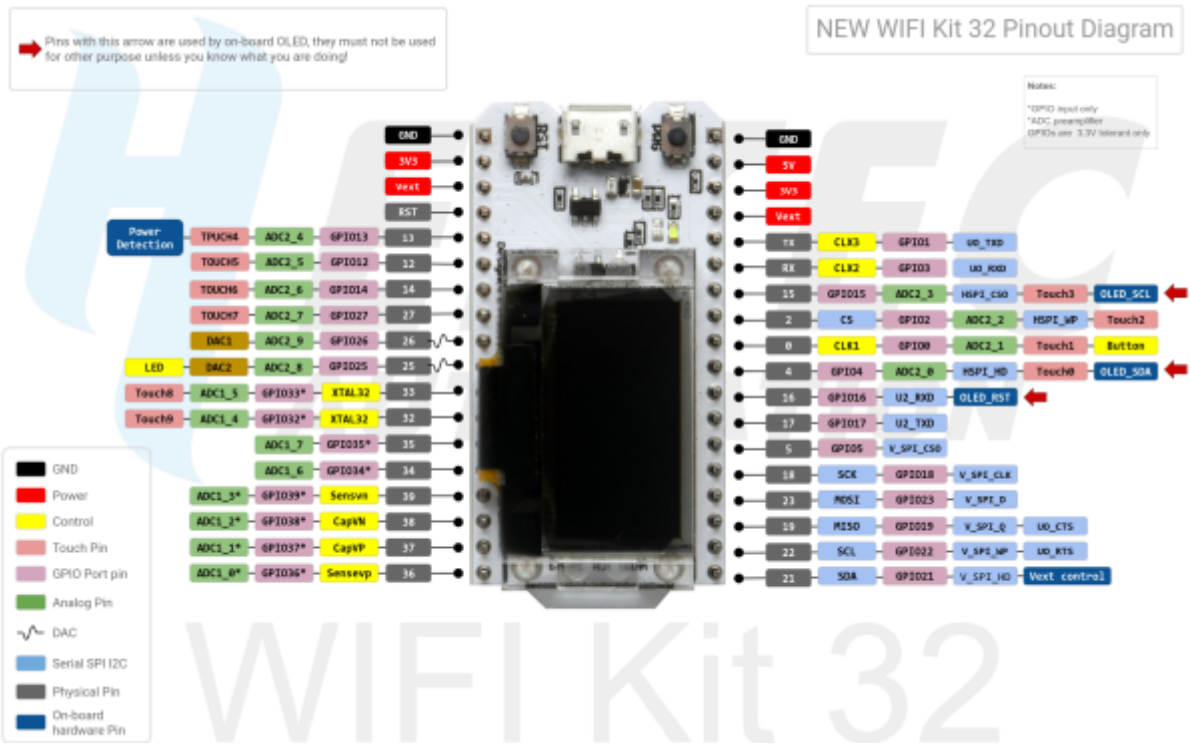

From:
https://wiki.csgalileo.org/ - **Galileo Labs**

Permanent link:
https://wiki.csgalileo.org/projects/internetofthings/esp32?rev=1623992383

Last update: **2021/06/18 06:59**